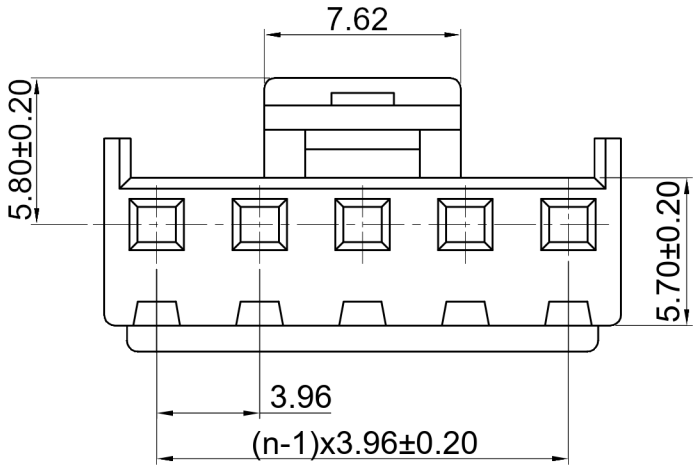

Insulator:	Thermoplastic PA66, rated UL94 V-0
Insulation Resistance:	1000 MΩ min.
Test Voltage:	1500 V AC / minute
Current Rating:	7 A AC/DC
Voltage Rating:	250 V AC DC
Temperature Range:	-25 °C ... +85 °C

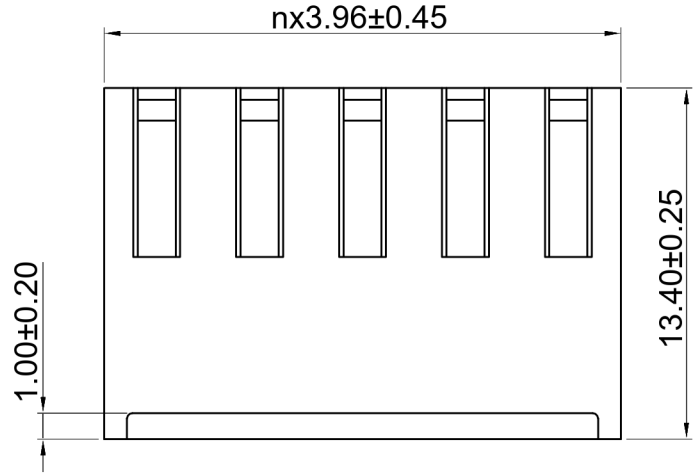

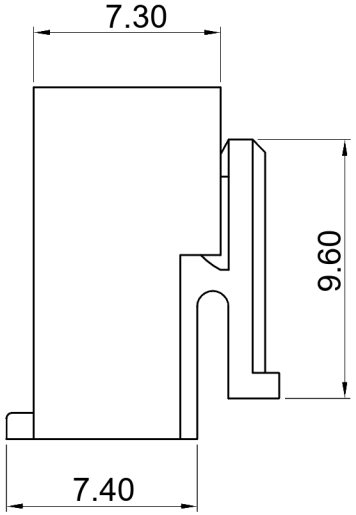

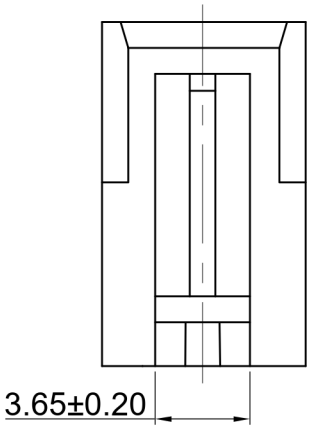

Only for 2P

Series	*Contacts **	*Type*
46-534	**05**	**1**
	02-16	**1** Buchsengehäuse *Housing*

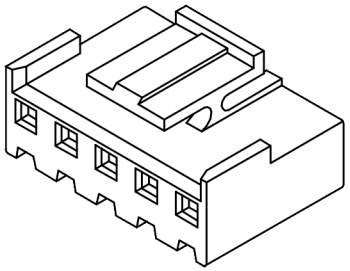

X	±0.30
.X	±0.25
.XX	±0.20
.XXX	±0.05
Angle	±1°
DIM	TOL

WE CONNECT IT

Serial Number 46-534			
Part Name Crimp Housing for Friction Lock Header 3.96mm Pitch			
Creation date 2022-07-08	Drawn AL	Approved PS	Approval date 2022-07-08
	REACH (EG) Nr. 1907/2006 RoHS 2011/65/EU compliant	Scale %	Sheet 1 / 4

On release of the data sheet, previous releases are no longer valid. Design and specifications are subject to change.

Copying of this document, and giving it to others and the use or communication of the contents thereof, are forbidden without express authority. Offenders are liable to the payment of damages. All rights are reserved in the event of the grant of a patent or the registration of a utility model or design.

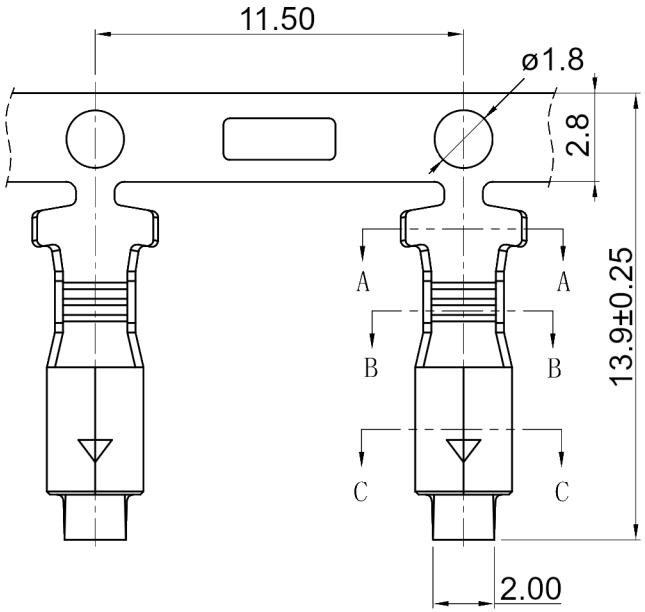

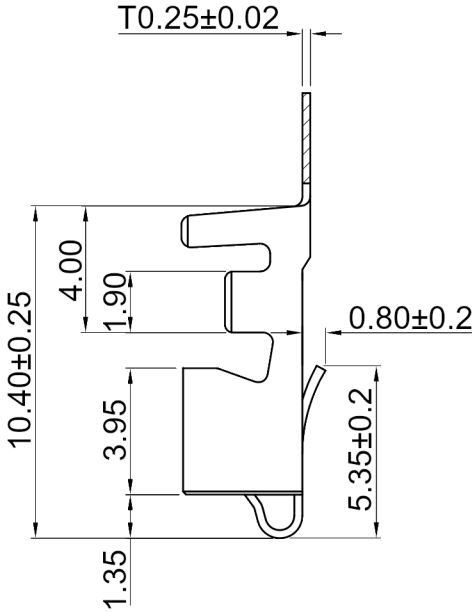

Contact Material:	Phosphor Bronze
Contact Surface:	Sn over Ni
Test Voltage:	1500 V AC / min.
Applicable wire:	AWG 16 ~ 20
Contact Resistance:	20 mΩ max.
Current Rating:	7 A AC/DC
Voltage Rating:	250 V AC DC
Temperature Range:	-25 °C ... +85 °C

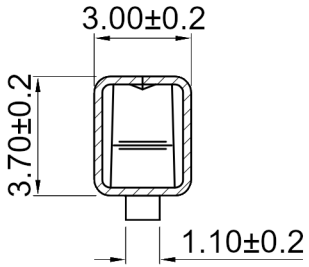

Section: C-C

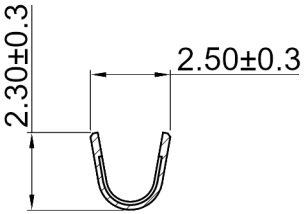

Section: B-B

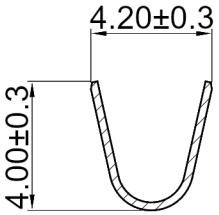

Section: A-A

Series	*Contacts*	*Type*	*Plating*
46-534	**01**	**2**	**50**
		2 Buchsenkontakt *Crimp contacts*	**50** Verzinnt *Tin plated*

X	±0.30
.X	±0.25
.XX	±0.20
.XXX	±0.05
Angle	±1°
DIM	TOL

WE CONNECT IT

Serial Number
46-534

Part Name
Crimp contact for Friction Lock Housing 3.96mm Pitch

Creation date	Drawn	Approved	Approval date
2022-07-08	AL	PS	2022-07-08

REACH (EG) Nr. 1907/2006
RoHS 2011/65/EU compliant

Scale %

Sheet 2 / 4

On release of the data sheet, previous releases are no longer valid. Design and specifications are subject to change.

Copying of this document, and giving it to others and the use or communication of the contents thereof, are forbidden without express authority. Offenders are liable to the payment of damages. All rights are reserved in the event of the grant of a patent or the registration of a utility model or design.

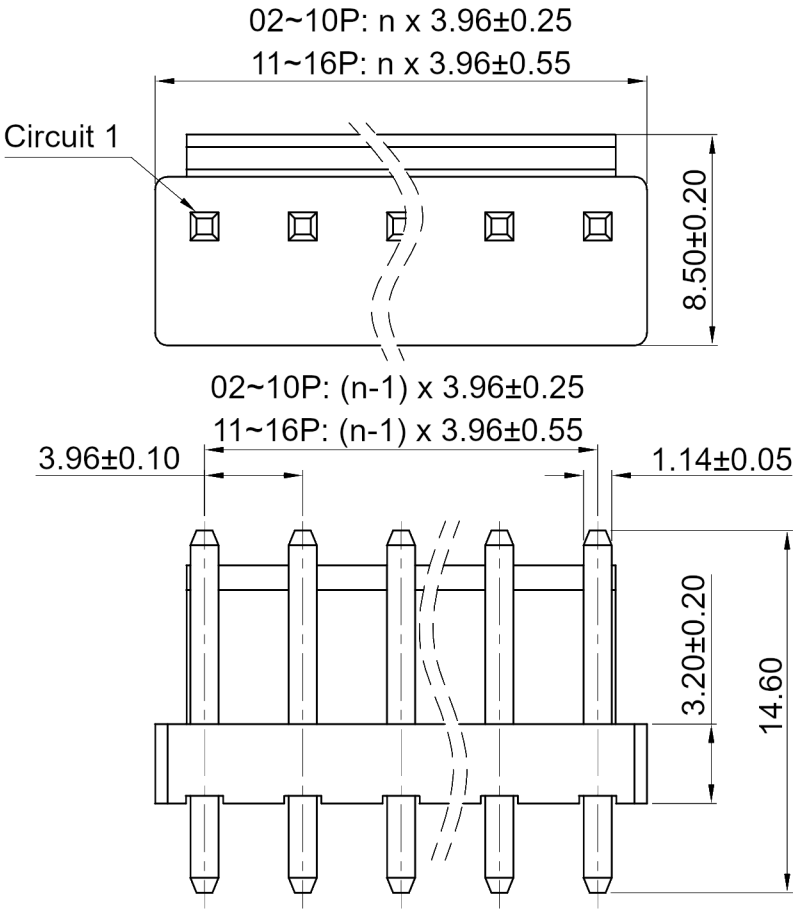

Insulator:	Thermoplastic, rated UL94 V-0
Contact Material:	Copper Alloy
Contact Surface:	Sn over Ni
Insulation Resistance:	1000 MΩ min.
Test Voltage:	1500 V AC / minute
Contact Resistance:	20 mΩ max.
Current Rating:	7 A AC/DC
Voltage Rating:	250 V AC DC
Temperature Range:	-25 °C ... +85 °C
Processing:	Wave soldering

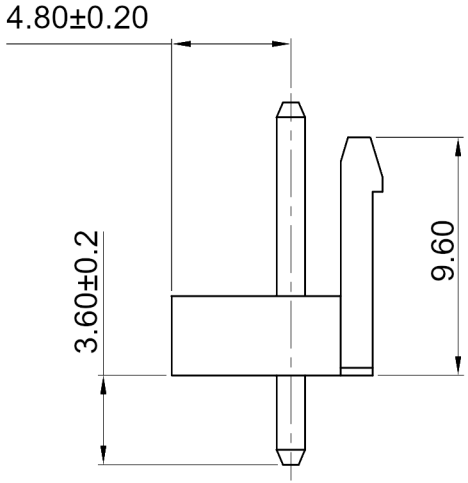

P. C. B. LAYOUT

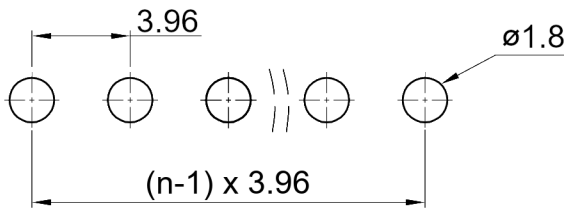

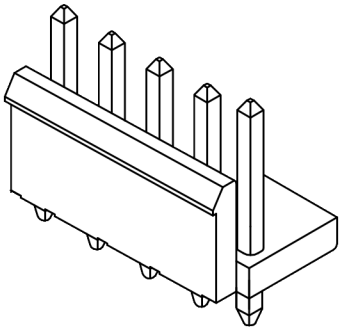

Series	Contacts*	Type	Plating
46-534	10	3	50
	02-16	3 Stiftleiste gerade *Straight pin header*	50 Verzinnt *Tin plated*

X	±0.30
.X	±0.25
.XX	±0.20
.XXX	±0.05
Angle	±1°
DIM	TOL

W+P WE CONNECT IT

Serial Number 46-534			
Part Name Friction Lock Header 3.96mm Pitch, Straight			
Creation date 2022-07-08	Drawn AL	Approved PS	Approval date 2022-07-08
REACH (EG) Nr. 1907/2006 RoHS 2011/65/EU compliant		Scale %	Sheet 3 / 4

On release of the data sheet, previous releases are no longer valid. Design and specifications are subject to change.

Copying of this document, and giving it to others and the use or communication of the contents thereof, are forbidden without express authority. Offenders are liable to the payment of damages. All rights are reserved in the event of the grant of a patent or the registration of a utility model or design.

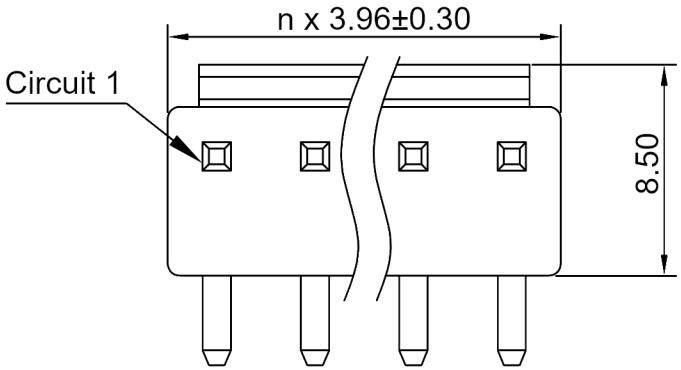

Insulator:	Thermoplastic PA66, rated UL94 V-0
Contact Material:	Copper Alloy, 0.64mm square pin
Contact Surface:	Sn over Ni
Insulation Resistance:	1000 MΩ min.
Test Voltage:	1500 V AC / minute
Contact Resistance:	20 mΩ max.
Current Rating:	7 A AC/DC
Voltage Rating:	250 V AC DC
Temperature Range:	-25 °C ... +85 °C
Processing:	Wave soldering

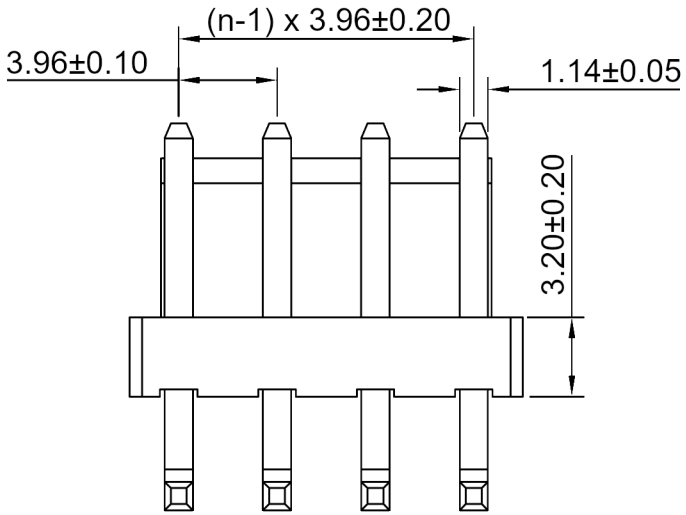

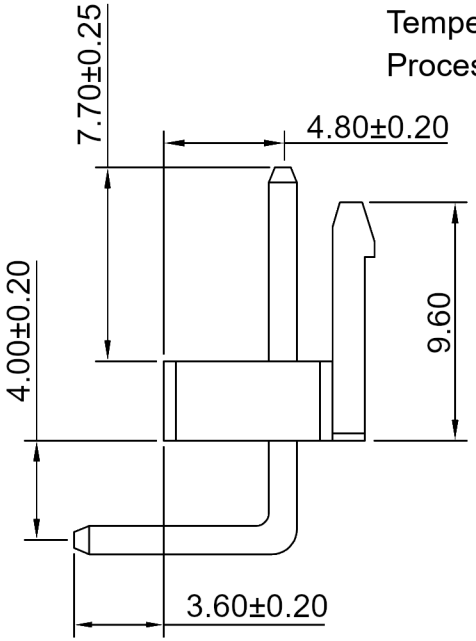

P. C. B. LAYOUT

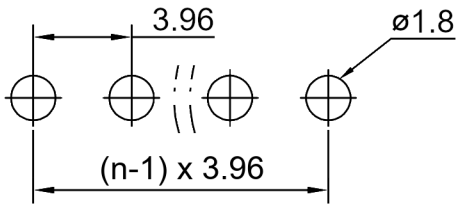

Series	Contacts*	Type	Plating
46-534	10	4	50
	02-16	4 Stiftleiste gewinkelt *Right-angled pin header*	50 Verzinnt *Tin plated*

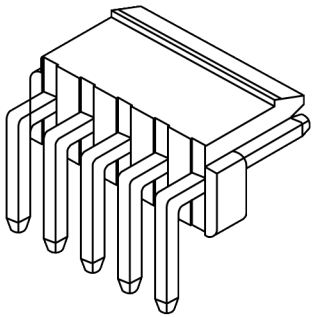

X	±0.30
.X	±0.25
.XX	±0.20
.XXX	±0.05
Angle	±1°
DIM	TOL

WE CONNECT IT

Serial Number 46-534			
Part Name Friction Lock Header 3.96mm Pitch, Right-Angled			
Creation date 2022-07-08	Drawn AL	Approved PS	Approval date 2022-07-08
REACH (EG) Nr. 1907/2006 RoHS 2011/65/EU compliant		Scale %	Sheet 4 / 4

On release of the data sheet, previous releases are no longer valid. Design and specifications are subject to change.

Copying of this document, and giving it to others and the use or communication of the contents thereof, are forbidden without express authority. Offenders are liable to the payment of damages. All rights are reserved in the event of the grant of a patent or the registration of a utility model or design.